Current part is item (44) on diagram. Available at www.oshkoshequipment.com

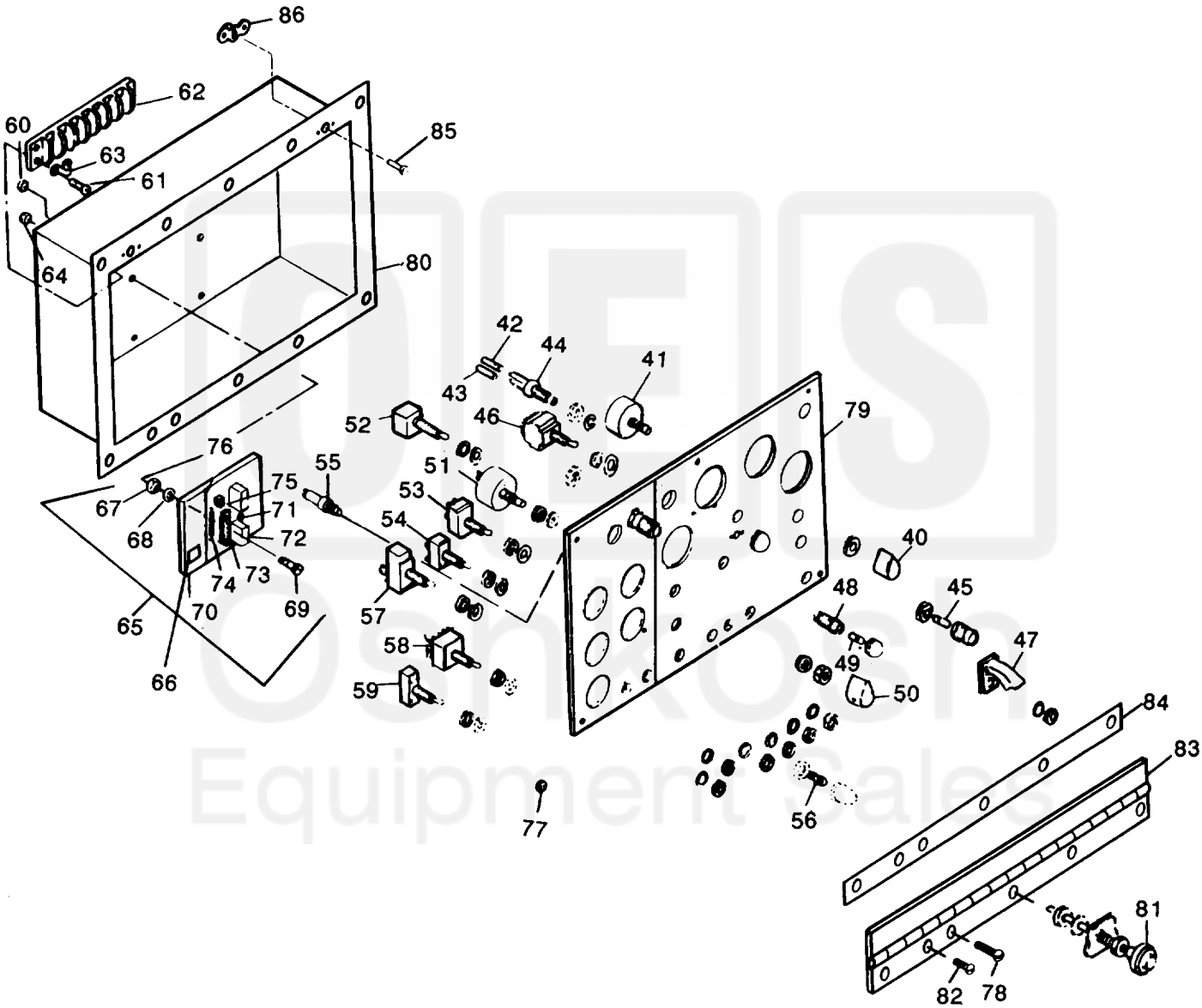

Figure 8. Control Cubicle Assembly and Manual Speed Control (Sheet 2 of 2)

Current part is item (44) on diagram. Available at www.oshkoshequipment.com

Current part is item (44) on diagram. Available at www.oshkoshequipment.com

(1) ILLUSTRATION A FIG. NO.	B ITEM NO.	(2) SMR CODE A ARMY	B AIR FORCE	C NAVY	D USMC	(3) A SSI	B REPL FACTOR	(4) NATIONAL STOCK NUMBER	(5) DESCRIPTION REF NUMBER & MFR CODE	USABLE ON CODE	(6) U/M	(7) QTY INC IN UNITS	(8) USMC QTY PER EQUIP
8	29	PAOZZ	PAOZZ	PAGZZ		D	.008	5310-00-052-3632	NUT WASHER ASSEMBLY 69-561-3 30554 511-081800-00 78189		EA	4	
8	30	PAOZZ	PAOZZ	PAG				5305-00-984-6193	SCREW MACHINE:CONVERTER MTG MS35206-245 96906		EA	4	
8	31	PAOZZ	PAOZZ	PAGZZ			.030	6625-00-003-0973	CONVERTER, WATT 69-589-1 30554 268086 65092	CLD,CLF CZL	EA	1	
8	31	PAOZZ	PAOZZ	PAGZZ			.030	6625-00-003-0974	CONVERTER, WATT 69-589-2 30554 268087 65092	CLE,DGH	EA	1	
8	32	PAFZZ	PAOZZ	PAGZZ		D	.008	5310-00-094-3421	NUT WASHER ASSEMBLY:CLAMP MTG 69-561-4 30554 511-101800-00 78189		EA	4	
8	33	PAFZZ	PAOZZ	PAGZZ		D	.008	5305-00-145-0960	SCREW, MACHINE: CLAMP MTG MS35206-338 96906		EA	3	
8	34	PAOZZ	PAOZZ	PAGZZ		D	.008	5340-00-057-2904	CLAMP, LOOP:WIRING HARNESS MS21333-71 96906		EA	1	
8	35	PAOZZ	PAOZZ	PAGZZ		D	.008	5310-00-052-3632	NUT WASHER ASSEMBLY:CLAMP MTG 69-561-3 30554 511-081800-00 78189		EA	3	
8	36	PAFZZ	PAOZZ	PAGZZ				5305-00-984-6193	SCREW, MACHINE:CLAMP MTG MS35206-245 96906		EA	3	
8	37	PAOZZ	PAOZZ	PAGZZ		D	.088	5340-00-050-2740	CLAMP, LOOP:WIRING HARNESS MS21333-75 96906		EA	3	
8	38	PAFZZ	PAOZZ	PAGZZ		D	.008	5310-00-052-3632	NUT WASHER ASSEMBLY:WIRING HARNESS 69-561-3 30554 511-081800-00 78189		EA	4	
8	39	PAFZZ	PAOZZ	PAGZZ				5305-00-984-6193	SCREW, MACHINE:WIRING HARNESS MTG MS35206-245 96906		EA	4	
8	40	XBOZZ	PAOZZ	PAOZZ		D	.020	5355-00-916-2060	KNOB, CONTROL RHEOSTAT MS9158-2P4B 96906		EA	1	
8	41	PAOZZ	PAOZZ	PAGZZ			.090	5905-00-264-7368	RHEOSTAT, VOLTAGE REGULATOR 69-548 30554 RPIOIFD251KK 81349		EA	1	
8	42	PAOZZ	PAOZZ					5970-00-954-1622	INSULATION, SLEEVING M23053-5-105-0 81349	CZL,DGH	FT	V	
8	43	PAOZZ	PAOZZ					5970-00-815-1295	INSULATION, SLEEVING M23053-5-106-0 81349	CZL,DGH	FT	V	
8	44	PAOZZ	XB	PAGZZ			.040	6210-00-686-4999	LIGHT ASSEMBLY, INDICATOR AIR CLEANER AND BATTLE SHORT MS25331-2 96906		EA	2	

Current part is item (44) on diagram. Available at www.oshkoshequipment.com